EXP.No.: 01
DATE: 27.01.26
Sr.No.: 01

VERIFICATION OF KIRCHHOFF'S LAWS

AIM:

To verify Kirchhoff's voltage law and Kirchoff's law both theoretically and practically for a given DC circuit.

APPARATUS REQUIRED:

SL.No.	APPARATUS	SPECIFICATION	QUANTITY
1.	Regulated Power Supply (RPS)	(0-30)V	1
2.	Voltmeter	(0-30V) MC	3
3.	Ammeter	(0-10mA) MC	3
4.	Resistors	1 kΩ	3
5.	Bread board	—	1

PROCEDURE:

1. Give connections as per the circuit diagram.
2. Switch ON the supply, vary the RPS (Regulated Power Supply) and set a particular input voltage.
3. Note down the readings of ammeters and voltmeters and tabulate them.
4. Vary the RPS for different input voltages and note down the readings of all the meters.
5. Reduce the RPS to its minimum value and switch OFF the supply.
6. Using the tabulated values, verify Kirchoff's laws practically and verify it theoretically.

⊛ CIRCUIT DIAGRAM:

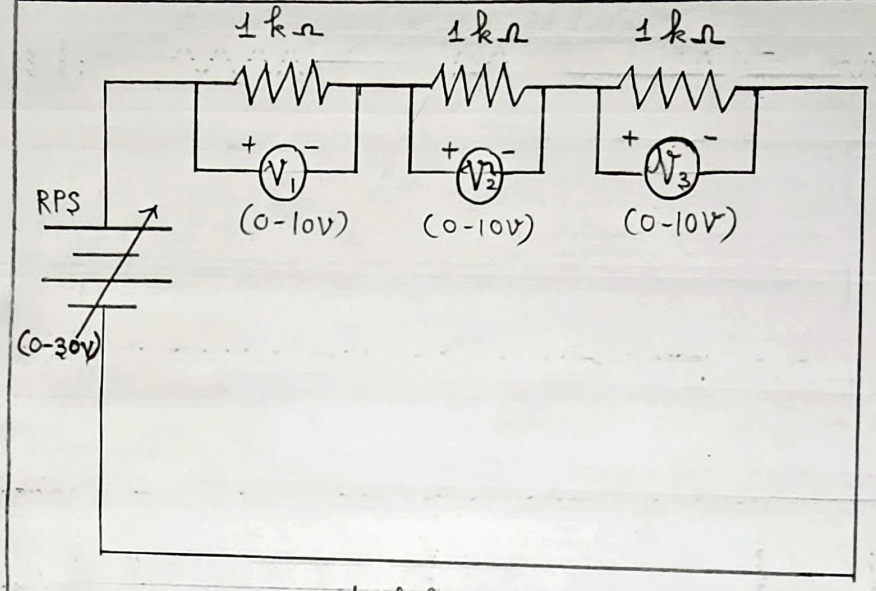

KVL

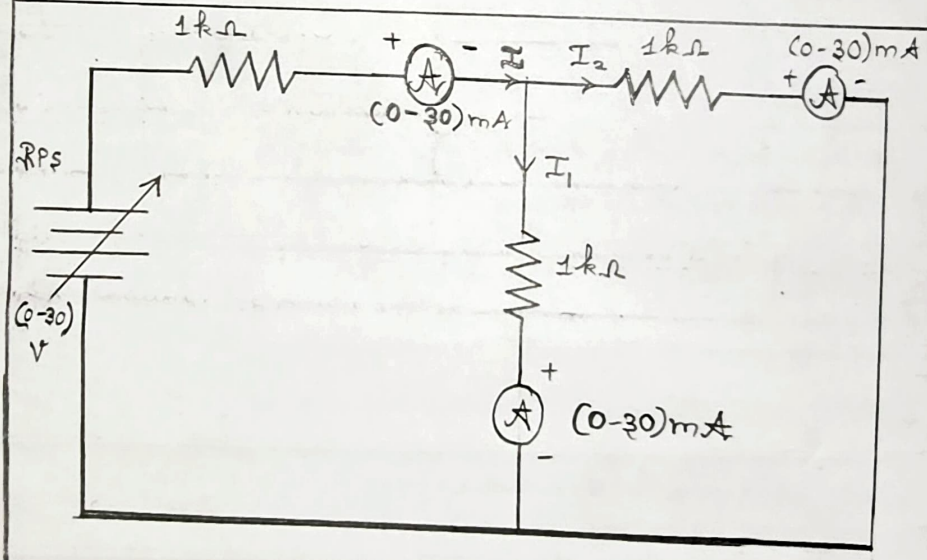

KCL

⊛. TABULAR COLUMN(S):

V (Volts)	V_1 (Volts)	V_2 (Volts)	V_3 (Volts)	$V = V_1 + V_2 + V_3$ (Volts)	I (Amps)	I_1 (Amps)	I_2 (Amps)	$I = I_1 + I_2$ (Amps)
2	0.85	0.82	0.86	2.55	1.06	0.54	0.53	1.06
6	2	1.98	1.96	5.94	3.35	1.66	1.68	3.35
9	3.1	3.1	3	9.2	5.19	2.58	2.58	5.19

Unverified

⊛. CALCULATIONS:

- **Practical Verification:**

→ V/I should be constant (Ohm's Law).

→ V should be equal to $(V_1 + V_2 + V_3)$.

→ I_1 should be equal to $(I_2 + I_3)$.

- **Theoretical Verification:**

▸ **KIRCHHOFF'S VOLTAGE LAW:**

(i). **For 2V Supply:**

$V_1 = 0.85V$; $V_2 = 0.82V$; $V_3 = 0.86V$.

$V = V_1 + V_2 + V_3 = (0.85 + 0.82 + 0.86)V = 2.55V \approx 2V$.

(ii). **For 6V Supply:**

$V_1 = 2V$; $V_2 = 1.98V$; $V_3 = 1.96V$.

$V = V_1 + V_2 + V_3 = (2 + 1.98 + 1.96)V = 5.9V \approx 6V$.

(iii). **For 9V Supply:**

$V_1 = 3.1V$; $V_2 = 3.1V$; $V_3 = 3V$.

$V = V_1 + V_2 + V_3 = (3.1 + 3.1 + 3)V = 9.2V \approx 9V$.

▶ KIRCHHOFF'S CURRENT LAW:

(i) For 2V Supply:

$I = 1.06\,A$; $I_1 = 0.54\,A$; $I_2 = 0.53\,A$.

$I = I_1 + I_2 = (0.54 + 0.53)\,A = 1.12\,A \approx 1.06\,A$

(ii) For 6V Supply:

$I = 3.35\,A$; $I_1 = 1.66\,A$; $I_2 = 1.68\,A$.

$I = (1.66 + 1.68)\,A = 3.34\,A \approx 3.35\,A$.

(iii) For 9V Supply:

$I = 5.19\,A$; $I_1 = 2.58\,A$; $I_2 = 2.58\,A$.

$I = (2.58 + 2.58)\,A = 5.16\,A \approx 5.19\,A$.

MARKS SPLIT-UP:

Sl. No.	DESCRIPTION	MARKS ALLOTTED	MARKS OBTAINED
1.	Experimental Setup/Connections	20 MARKS	20
2.	Observation/Readings	20 MARKS	20
3.	Calculations/Results	20 MARKS	20
4.	Viva	20 MARKS	20
5.	Record	20 MARKS	20
		TOTAL :	100

RESULT:

Thus, Kirchoff's Current Law and Kirchoff's Voltage Law are verified practically.